DS-2CV2U21FD-IW/(16G-T/32G-T/64G-T)
2.0 MP Network Cube Camera

Key Features

- Up to 2.0 megapixel high resolution
- Two video streams
- 2.8mm fixed lens
- Digital Wide Dynamic Range
- 3D Digital Noise Reduction
- Build-in microphone and speaker, support two-way audio
- Support on-board storage, up to 128GB
- Up to 10 m IR range
- Built-in Wi-Fi
- DC 5V ± 15 %, micro USB interface
- Mobile Monitoring via Hik-Connect or iVMS-4500

Specifications

Camera	
Image Sensor	1/2.8" Progressive Scan CMOS
Min. Illumination	0.01Lux @ (F1.2, AGC ON), 0 Lux with IR
Shutter Speed	1/3 s to 1/100,000 s
Slow Shutter	Support
Iris	F2.0
Lens	2.8mm, horizontal field of view 105.8°
Lens Mount	M12
Day &Night	IR cut filter with auto switch
DNR	3D DNR
Wide Dynamic Range	Digital WDR
Compression Standard	
Video Compression	Main stream: H.264 Sub stream: H.264
H.264 Type	Baseline Profile/Main Profile
Video Bit Rate	32 Kbps – 8 Mbps
Audio Compression	G.711/G.722.1/G.726/MP2L2/PCM
Audio Bit Rate	64Kbps(G.711)/16Kbps(G.722.1)/16Kbps(G.726)/32-160Kbps(MP2L2)
Image	
Max. Resolution	1920 × 1080
Main Stream Max. Frame Rate	50Hz: 25fps (1920 × 1080, 1280 ×720) 60Hz: 30fps (1920 × 1080, 1280 ×720)
Sub Stream Max. Frame Rate	50Hz: 25fps (704 × 576, 352 × 288, 640 × 480, 320 × 240) 60Hz: 30fps (704 × 480, 352 × 240, 640 × 480, 320 × 240)
Image Settings	Brightness, saturation, sharpness, contrast are adjustable via client software
Day/Night Switch	Support auto/scheduled
Backlight Compensation	Support, zone optional
Region of Interest	Support 1 fixed region for each stream
Audio	
Environment Noise Filter	Support
Audio Input/Output	Support mono soundtrack
Audio Sampling Rate	Max. 16 kHz
Network	
Network Storage	Support microSD/SDHC/SDXC card, up to 128 GB local storage
Detection	Motion Detection
Alarm Trigger	Video Tampering Alarm, HDD Full, HDD Error, Network Disconnected, IP Address Conflicted, Illegal Login
Protocols	TCP/IP, ICMP, HTTP, HTTPS, FTP, DHCP, DNS, RTP, RTSP, RTCP, NTP, UPnP, IGMP, QoS, IPv6, Bonjour, SMTP, 802.1x
Standard	ISAPI, CGI
General Function	One-key reset, Anti-flicker, Heartbeat, Mirror, Password Protection, Privacy Mask, Watermark
Interface	
On-board Storage	Built-in Micro SD/SDHC/SDXC slot, up to 128 GB
Audio Interface	1 build-in microphone, 1 build-in speaker
Reset	Yes

Wi-Fi	
Wireless Standards	IEEE802.11b, 802.11g, 802.11n
Frequency Range	2.4 GHz - 2.4835 GHz
Channel Bandwidth	20/40MHz Support
Protocols	802.11b: CCK, QPSK, BPSK, 802.11g/n: OFDM
Security	64/128-bit WEP, WPA/WPA2, WPA-PSK/WPA2-PSK, WPS
Transfer Rates	11b: 11Mbps, 11g: 54Mbps, 11n: up to 150Mbps
Wireless Range	50 meters (The performance varies based on actual environment)
General	
Operating Conditions	-10 °C to 40°C (14 °F to 104 °F), Humidity 95% or less (non-condensing)
Power Supply	DC 5V ± 15 %, micro USB interface
Current	Max. 0.9A
Power Consumption	Max. 4.5W
IR Range	Up to 10 meters
Material	Plastic
Memory Card	DS-2CV2U21FD-IW: no memory card included DS-2CV2U21FD-IW/16G-T: includes a 16 GB memory card DS-2CV2U21FD-IW/32G-T: includes a 32 GB memory card DS-2CV2U21FD-IW/64G-T: includes a 64 GB memory card
Dimensions	Φ 64 × 106.9 mm (Φ 2.52'' × 4.21'')
Weight	115 g (0.25 lbs)

Ordering Models

DS-2CV2U21FD-IW, DS-2CV2U21FD-IW/16G-T, DS-2CV2U21FD-IW/32G-T, DS-2CV2U21FD-IW/64G-T

Dimensions

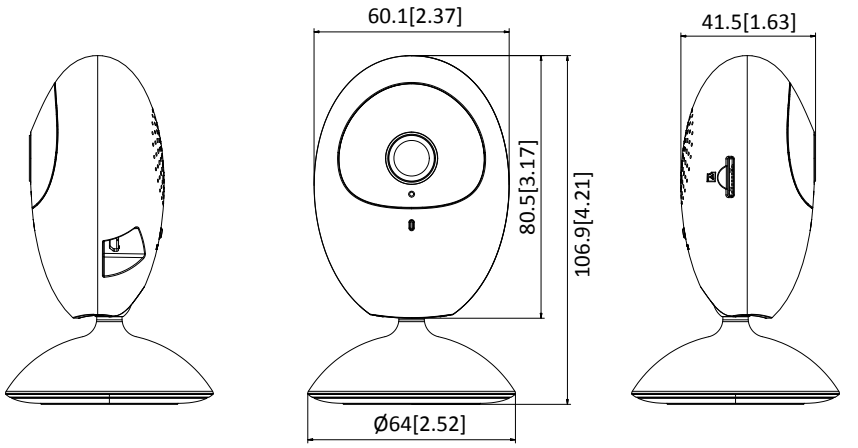

UNIT: mm [inch]

Distributed by

Headquarters
No.555 Qianmo Road, Binjiang District,
Hangzhou 310051, China
T +86-571-8807-5998
overseasbusiness@hikvision.com

Hikvision USA
T +1-909-895-0400
sales.usa@hikvision.com

Hikvision Europe
T +31-23-55-42-770
info.eu@hikvision.com

Hikvision Middle East
T +971-4-8816086
salesme@hikvision.com

Hikvision Russia
T +7-495-669-67-99
saleru@hikvision.com

Hikvision India
T +91-22-28469900
sales@pramahikvision.com

Hikvision Italy
T +39-0438-6902
info.it@hikvision.com

Hikvision France
T +33(0)1-85-330-450
info.fr@hikvision.com

Hikvision Spain
T +34-91-737-16-55
info.es@hikvision.com

Hikvision Poland
T +48-22-460-01-50
poland@hikvision.com

Hikvision UK
T +01628-902140
support.uk@hikvision.com

Hikvision Singapore
T +65-6684-4718
sg@hikvision.com

Hikvision Oceania
T +61-2-8599-4233
salesau@hikvision.com

Hikvision Canada
T +1-909-895-0400
sales.usa@hikvision.com

Hikvision Korea
T +82-31-731-8841
sales.korea@hikvision.com

Hikvision Brazil
T +55 11 3318-0050
Latam.support@hikvision.com

Hikvision Africa
T +27 (10) 0351172
sale.africa@hikvision.com

Hikvision Hong Kong
T +852-2151-1761

© Hikvision Digital Technology Co., Ltd. 2016 | Data subject to change without notice | **05040420170517**