DS-2DF6A836X-AEL (B)
8MP 36× Network Speed Dome

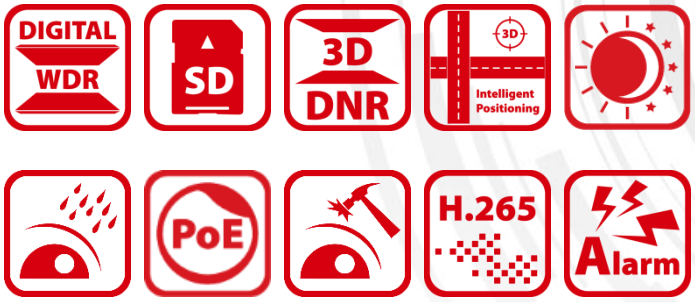

Hikvision DS-2DF6A836X-AEL (B) 8MP 36× Network Speed Dome adopts 2/3" progressive scan CMOS chip. With the 36× optical zoom lens, the camera offers more details over expansive areas.

This series of cameras can be widely used for wide ranges of high-definition, such as the rivers, forests, roads, railways, airports, ports, squares, parks, scenic spots, stations and large venues, etc.

Key Features

- 2/3" progressive scan CMOS
- Up to 4096 × 2160 resolution
- Min. illumination:
  Color: 0.005 Lux @(F1.5, AGC ON)
  B/W: 0.0005 Lux @(F1.5, AGC ON)
- 36× optical zoom, 16× digital zoom
- Digital WDR, 3D DNR, HLC, BLC, Defog, EIS
- 24 VAC &Hi-PoE
- Support H.265+/H.265 video compression
- Deep-learning-based target classification algorithm for auto-tracking 2.0 and perimeter protection
- IK10, IP67

Specification

Camera Module	
Image Sensor	2/3" progressive scan CMOS
Min. Illumination	Color: 0.005 Lux @(F1.5, AGC ON) B/W: 0.0005 Lux @(F1.5, AGC ON)
White Balance	Auto/Manual/ATW (Auto-tracking White Balance)/Indoor/Outdoor/Fluorescent Lamp/Sodium Lamp
Gain	Auto/Manual
Shutter Time	1/1 s to 1/30,000 s
Day & Night	IR Cut Filter
Digital Zoom	16×
Privacy Mask	24 programmable polygon privacy masks
Focus Mode	Auto/Semi-automatic/Manual
WDR	Digital WDR
Rapid Focus	Support
Lens	
Focal Length	7.5 mm to 270 mm, 36× optical zoom
Zoom Speed	Approx. 7.8 s (optical lens, wide-tele)
FOV	Horizontal field of view: 56.1° to 2.0° (wide-tele) Vertical field of view: 33.4° to 1.1° (wide-tele) Diagonal field of view: 62.9° to 2.3° (wide-tele)
Working Distance	10 mm to 1500 mm (wide-tele)
Aperture Range	F1.5 to F4.5
PTZ	
Movement Range (Pan)	360° endless
Pan Speed	Configurable, from 0.1°/s to 350°/s, preset speed: 540°/s
Movement Range (Tilt)	From -20° to 90° (auto flip)
Tilt Speed	Configurable, from 0.1°/s to 240°/s, Preset Speed: 400°/s
Proportional Zoom	Support
Presets	300
Patrol Scan	8 patrols, up to 32 presets for each patrol
Pattern Scan	4 pattern scans, record time over 10 minutes for each scan
Power-off Memory	Support
Park Action	Preset/Pattern Scan/Patrol Scan/Auto Scan/Tilt Scan/Random Scan/Frame Scan/Panorama Scan
3D Positioning	Support
PTZ Position Display	Support
Preset Freezing	Support
Scheduled Task	Preset/Pattern Scan/Patrol Scan/Auto Scan/Tilt Scan/Random Scan/Frame Scan/Panorama Scan/Dome Reboot/Dome Adjust/Aux Output
Compression Standard	
Video Compression	Main Stream: H.265+/H.265/H.264+/H.264 Sub-Stream: H.265/H.264/MJPEG Third Stream: H.265/H.264/MJPEG
H.264 Type	Baseline Profile/Main Profile/High Profile
H.264+	Support
H.265 Type	Main Profile
H.265+	Support
Video Bitrate	32 Kbps to 16384 Kbps
Audio Compression	G.711alaw/G.711ulaw/G.722.1/G.726/MP2L2/PCM

Audio Bitrate	64Kbps(G.711)/16Kbps(G.722.1)/16Kbps(G.726)/32-160Kbps(MP2L2)
Smart Feature	
Perimeter Protection	Intrusion, Line Crossing, Region Entrance, Region Exiting Support alarm triggering by specified target types (human and vehicle) Filtering out mistaken alarm caused by target types such as leaf, light, animal, and flag, etc.
Event Detection	Unattended Baggage Detection, Object Removal Detection, Face Detection, Audio Exception Detection
Smart Tracking	Manual Tracking, Auto Tracking (support tracking specified target types such as human and vehicle), Event Tracking
Smart Record	ANR (Automatic Network Replenishment), Dual-VCA
ROI	Support
Image	
Max. Resolution	4096 × 2160
Main Stream	50Hz: 25fps (4096 × 2160, 3840 × 2160, 3072 × 1728, 2560 × 1440, 2048 × 1536, 1920 × 1080, 1280 × 960, 1280 × 720) 60Hz: 30fps (4096 × 2160, 3840 × 2160, 3072 × 1728, 2560 × 1440, 2048 × 1536, 1920 × 1080, 1280 × 960, 1280 × 720)
Sub-Stream	50Hz: 25fps (704 × 576, 640 × 480, 352 × 288) 60Hz: 30fps (704 × 480, 640 × 480, 352 × 240)
Third Stream	50Hz: 25fps (1920 × 1080, 1280 × 960, 1280 × 720, 704 × 576, 640 × 480, 352 × 288) 60Hz: 30fps (1920 × 1080, 1280 × 960, 1280 × 720, 704 × 480, 640 × 480, 352 × 240)
Image Enhancement	HLC/BLC/3D DNR/Defog/EIS/Regional Exposure/Regional Focus
SVC	Support
Network	
Network Storage	Built-in memory card slot, support Micro SD/SDHC/SDXC, up to 256 GB; NAS (NPS, SMB/ CIPS), ANR
Alarm Linkage	Alarm actions, such as Preset, Patrol Scan, Pattern Scan, Memory Card Video Record, Trigger Recording, Notify Surveillance Center, Upload to FTP/Memory Card/NAS, Send Email, etc.
Protocols	IPv4/IPv6, HTTP, HTTPS, 802.1x, Qos, FTP, SMTP, UPnP, SNMP, DNS, DDNS, NTP, RTSP, RTCP, RTP, TCP/IP, DHCP, PPPoE, Bonjour
API	Open-ended, support ONVIF, ISAPI, and CGI, support HIKVISION SDK and Third-Party Management Platform
Simultaneous Live View	Up to 20 channels
User/Host	Up to 32 users. 3 levels: Administrator, Operator and User
Security Measures	User authentication (ID and PW), Host authentication (MAC address); HTTPS encryption; IEEE 802.1x port-based network access control; IP address filtering
Client	iVMS-4200, iVMS-4500, iVMS-5200, Hik-Connect
Web Browser	IE 8 to 11, Chrome 31.0 to 44, Firefox 30.0 to 51
Interface	
Alarm	7-ch alarm input/2-ch alarm output
Audio	1-ch Mic. Input (applicable microphone, plug-in power type), 2.0 to 2.4Vp-p, 1k Ohm±10% 1-ch Audio output, Line level, impedance: 600Ω
Network Interface	1 RJ45 10 M/100 M Ethernet Interface, Hi-PoE
RS-485	Half duplex, HIKVISION, Pelco-P, Pelco-D, self-adaptive
BNC	1.0 V [p-p]/75 Ω, NTSC (or PAL) composite, BNC
General	
Power	24 VAC (Max. 60 W) , Hi-PoE (Max. 50 W)
Working Environment	Temperature: -40°C to 65°C (-40°F to149°F) Humidity: ≤ 90%
Protection Level	IP67 Standard, IK10, 6000V Lightning Protection, Surge Protection and Voltage Transient Protection

Material	Aluminum alloy
Dimensions	Φ 231.1 mm × 355.6 mm (Φ 9.10" × 14")
Weight	Approx. 6 kg (13.23 lb)

Order Model

DS-2DF6A836X-AEL (B), 24 VAC &Hi-PoE

Dimensions

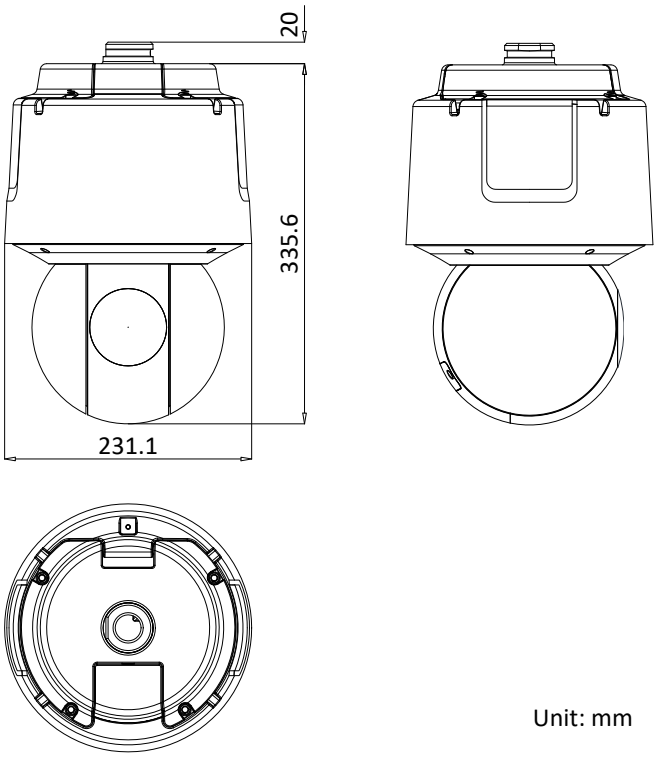

Unit: mm

Accessories

	DS-1604ZJ-P	Wall Mount
	DS-1661ZJ-P	Pendant Mount
	DS-1662ZJ-P	Pendant Mount
	DS-1667ZJ-P	Pendant Mount
	DS-1682ZJ-P	Extension Bar for Pendant Mount
	DS-1663ZJ-P	Ceiling Mount
	DS-1660ZJ-P	Parapet Mount
	DS-1604ZJ-Pole-P	Vertical Pole Mount
	DS-1604ZJ-Corner-P	Corner Mount
	DS-1100KI	Network Keyboard
	DS-1005KI	USB Joy-stick

Distributed by

Headquarters
No.555 Qianmo Road, Binjiang District,
Hangzhou 310051, China
T +86-571-8807-5998
overseasbusiness@hikvision.com

Hikvision USA
T +1-909-895-0400
sales.usa@hikvision.com

Hikvision Europe
T +31-23-5542770
sales.eu@hikvision.com

Hikvision UK & Ireland
T +01628-902140
sales.uk@hikvision.com

Hikvision UAE
T +971-4-4432090
salesme@hikvision.com

Hikvision Russia
T +7-495-669-67-99
saleru@hikvision.com

Hikvision Australia
T +61-2-8599-4233
salesau@hikvision.com

Hikvision Italy
T +39-0438-6902
info.it@hikvision.com

Hikvision South Africa
Tel: +27 (10) 0351172
sale.africa@hikvision.com

Hikvision Singapore
T +65-6684-4718
sg@hikvision.com

Hikvision Korea
T +82-(0)31-731-8817
sales.korea@hikvision.com

Hikvision India
T +91-22-28469900
sales@pramahikvision.com

Hikvision Brazil
T +55 11 3318-0050
Latam.support@hikvision.com

Hikvision France
T +33(0)1-85-330-450
info.fr@hikvision.com

Hikvision Spain
T +34-91-737-16-55
info.es@hikvision.com

Hikvision Poland
T +48-22-460-01-50
info.pl@hikvision.com

Hikvision Canada
T +1-866-200-6690
sales.canada@hikvision.com

Hikvision Turkey
T +90 (216)521 7070- 7074
sales.tr@hikvision.com

Hikvision Kazakhstan
T +7-727-9730667
nikia.panfilov@hikvision.ru

Hikvision Tashkent
T +99-87-1238-9438
uzb@hikvision.ru

Hikvision Indonesia
T +62-21-2933759
Sales.Indonesia@hikvision.com

Hikvision Thailand
T +662-275-9949
sales.thailand@hikvision.com

Hikvision Malaysia
T +601-7652-2413
sales.my@hikvision.com

Hikvision Vietnam
T +84-974270888
sales.vt@hikvision.com

Hikvision Hong Kong
T +852-2151-1761
info.hk@hikvision.com

Hikvision Colombia
sales.colombia@hikvision.com

© Hikvision Digital Technology Co., Ltd. 2018 | Data subject to change without notice | 0505211080423